Xera

Sink Mixer with Pull-out Spray

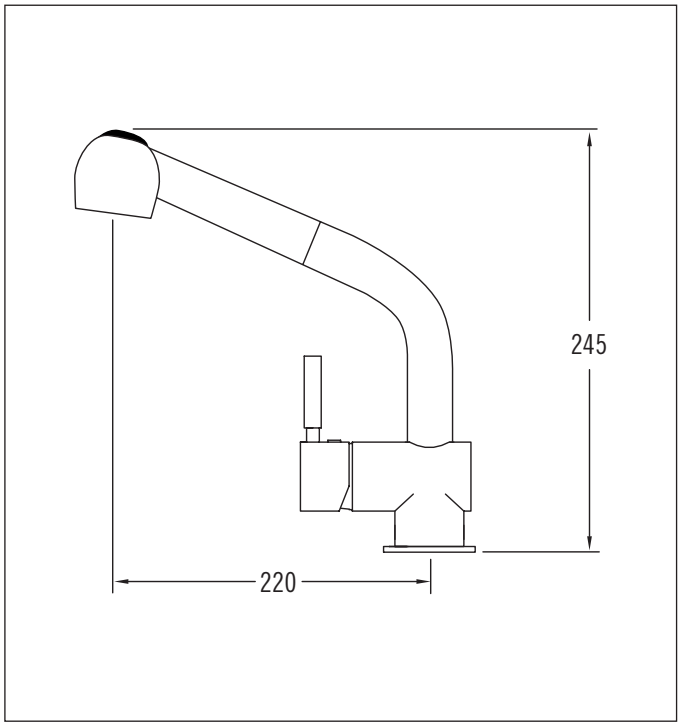

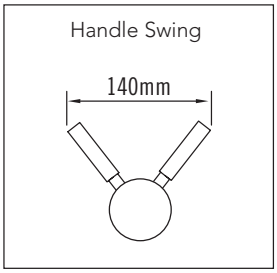

Code: X1 SMPS
Finish: Chrome only
Spout: Swivel 160˚

Aerator supplied
Available with straight handle only

Stainless Steel Inlet Hoses:

Hot:	I/D: 5mm	Size:	M10 x 1/2" BSP
		Length:	400mm
Cold:	I/D: 5mm	Size:	M10 x 1/2" BSP
		Length:	400mm

Spray Hose Internal Diameter:	6mm	
Metal Spray Hose:	Length:	1.5 metres
	1/4" BSP Fremale x M15 Male	
Spray Hose Extendable Length:	Maximum:	1 metre
	Recommended:	750mm

Handy Tip: Pull-out hose and counterweight must be free of interference under bench. (If flexi hoses are repeatedly hit, they will fail).

Metal Base Ring supplied with Flat seal

Mounting Hardware:	Studs:	1 x 12mm
	Nut:	14mm A/F
	Horseshoe Washer	
Installation Hole Diameter:	Minimum:	36mm
	Maximum:	44mm
	Recommended:	40mm
Cartridge:	Mondo 35K	Flat base

Handy Tip: Not recommended for commercial installations. Maximum bench thickness 40mm.

Suitable for equal mains pressure systems

Recommended Pressure Operational Range:
Minimum: 100 kPa
Recommended: 600 kPa
Never to Exceed: 1000 kPa

Maximum Operating Temperature: 70°C

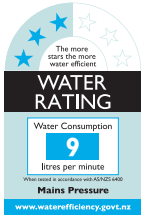

Aquatica Warranty

Aquatica NZ Limited offer, from the date of purchase, a 2 year warranty on handshowers, a 5 year warranty on tapware and accessories and a lifetime warranty on stainless steel sinks.

Aquatica NZ Limited warrants that only high quality workmanship and materials have been employed in the manufacture of its tapware, accessories and stainless steel products. If any faulty workmanship or materials is proven during the warranty period, Aquatica NZ Limited will at its own cost repair, or at its option replace, the faulty product. The guarantee is non-transferable and proof of purchase is required.

The use of spray or abrasive cleaners of any kind will void the warranty. (Tapware should only be cleaned with a mild detergent and a soft damp cloth).

Failure to use an in-line strainer or filter on lines to tapware incorporating a ceramic cartridge or ceramic disc mechanism may also void the warranty.

Every effort has been made to show the products as they will be sold, however, all models and specifications are subject to change without notice.

Aquatica NZ Limited
9 Saunders Place,
Avondale, Auckland.
Tel: 09-828 2068,
Fax: 09-828 2069
Email: info@aquatica.co.nz
or visit our website:
www.aquatica.co.nz