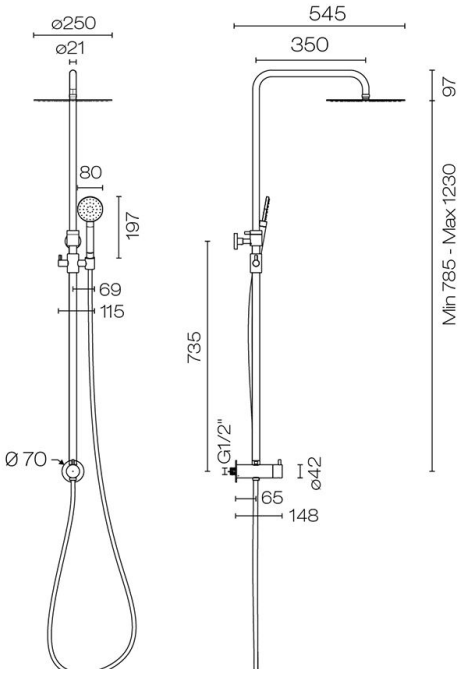


# Oli 316 Shower Column

**Code:** OL438

| | |
|---|---|
| **Brand** | Progetto |
| **Designer** | Plumbline |
| **Origin** | Italy |
| **Finish** | Brushed |
| **Installation** | Wall mount |
| **WELS Rating** | 2 Star |
| **Handshower Size** | √ò80 |
| **Showerhead Size** | √ò250 |
| **Water Inlet** | Requires 1/2" BSPF Wingback |
| **Backflow Preventer** | Yes |
| **Warranty** | 20 Years |
| **Material** | 316 Grade Stainless Steel |
| **Approx Lead Time** | 4-8 weeks may apply for some finishes. Please enquire for accurate leadtime. |
| **Notes** | Suitable for outdoors |
| **Other Information** | Latest water saving technology |

Scan to View
Product Online



Dimensions are approximate. Information provided on this data sheet is representative of the actual product available at the time of printing. Due to our policy of continuous product development, the designs and specifications depicted are subject to change without notice. | *Warranty: Refer to plumbline.co.nz/warranty-information for full details.