SPECIFICATION SHEET

CANOVA ROYAL FLOOR MOUNT TOILET | VPCR

plumbline

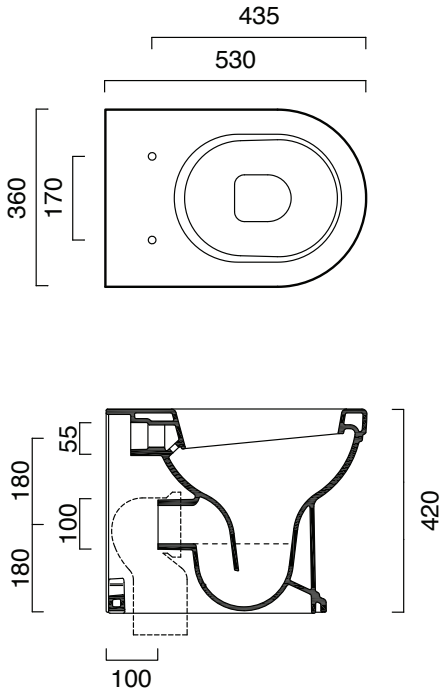

T 04 568 9898 **E** sales@plumbline.co.nz

plumbline.co.nz

quality + design + choice