SPECIFICATION SHEET

TEOREMA SFERA VESSEL BASIN | 8009

plumbline
QUALITY BATHROOMWARE AND PLUMBING PRODUCTS

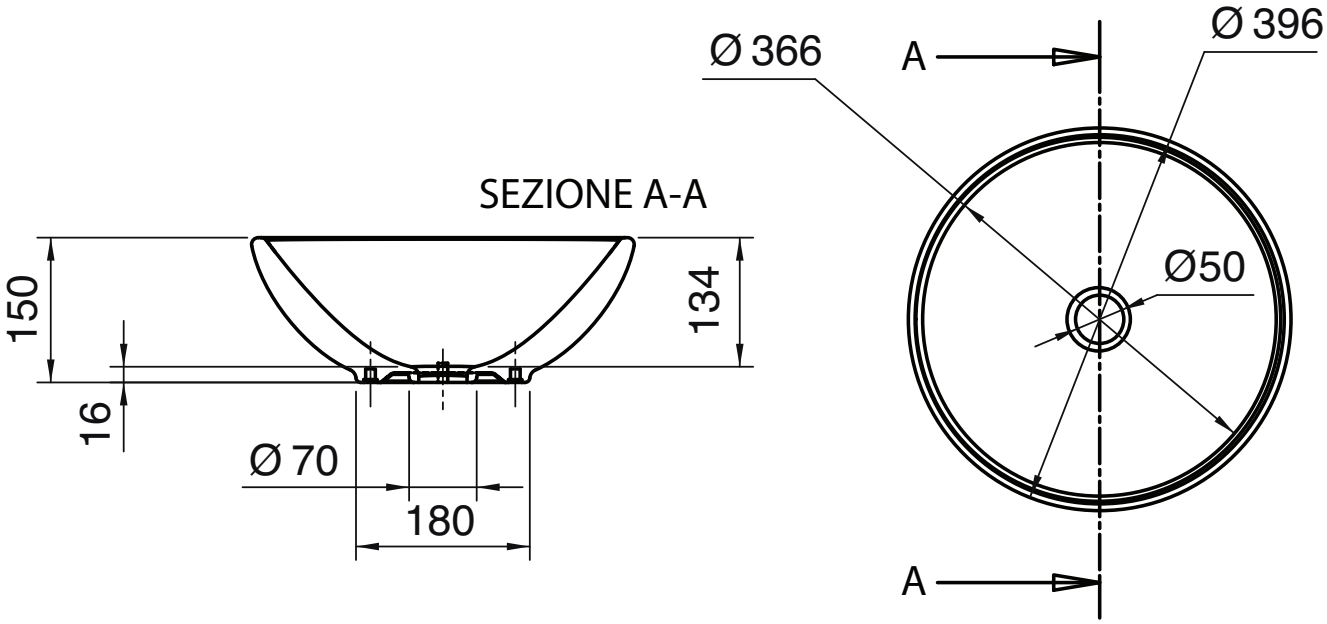

T 04 568 9898 **E** sales@plumbline.co.nz

plumbline.co.nz

quality + design + choice